Technical data sheet

Product features

Fry-top griddle plate 97x48 electric combined counter top 400 V / 3N		
Model	**SAP Code**	00011361
FTHR 90 E	**A group of articles - web**	Grills and grill plates



- Top type: Combinated
- Griddle dimensions [mm x mm]: 970 x 480
- Griddle thickness [mm]: 12.00
- Worktop material: Sandblasted steel
- Container for liquid fat: Yes
- Independent heating zones: Separate control for each heating zone
- Maximum device temperature [°C]: 300
- Surface finish: sandblasted surface without coating
- Removable rim: No

SAP Code	00011361	**Power electric [kW]**	9.000
Net Width [mm]	991	**Loading**	400 V / 3N - 50 Hz
Net Depth [mm]	541	**Griddle dimensions [mm x mm]**	970 x 480
Net Height [mm]	288	**Top type**	Combinated
Net Weight [kg]	73.00		

RM GASTRO, s.r.o.,
Třída Čs. armády 816,
391 81 Veselí nad Lužnicí 1, ID:49825062

Technical data sheet

Technical drawing

Fry-top griddle plate 97x48 electric combined counter top 400 V / 3N		
Model	**SAP Code**	00011361
FTHR 90 E	**A group of articles - web**	Grills and grill plates

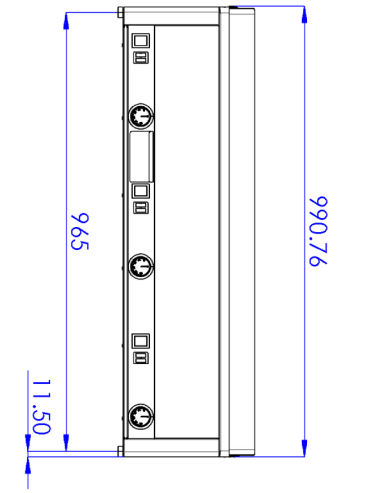

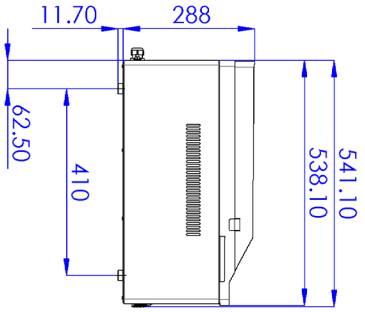

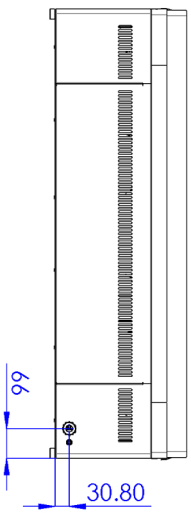

RM GASTRO, s.r.o.,
Třída Čs. armády 816,
391 81 Veselí nad Lužnicí 1, ID:49825062

Technical data sheet

Product benefits

Fry-top griddle plate 97x48 electric combined counter top 400 V / 3N		
Model	**SAP Code**	00011361
FTHR 90 E	**A group of articles - web**	Grills and grill plates

1 **All-stainless design**

long life
resistance of AISI 304 stainless steel material
the material does not cut

- savings on service interventions
- easy cleaning and maintenance of equipment

2 **Degree of protection of the control elements IPX4**

maintenance-free system
resistance to splash water
long life

- savings on service interventions
- easy cleaning and maintenance of equipment

3 **Outlet for waste liquids**

ensures that oil drips into the socket

- easy maintenance
- easy cleaning

4 **High non-removable hem**

better hygienic conditions
preventing grease from splashing onto ancillary equipment

- easy maintenance
- easy cleaning

5 **Combined plate made of chrome-plated steel**

the product bakes less and is easier to clean
a good warming of the meat with a groove

- time-saving in food preparation
- easy preparation of different types of dishes

6 **Cooking unit for use on a table or on a base**

variable use
the possibility of placement in smaller spaces

- easy handling
- cost savings on substructure

RM GASTRO, s.r.o.,
Třída Čs. armády 816,
391 81 Veselí nad Lužnicí 1, ID:49825062

Technical data sheet

Technical parameters

Fry-top griddle plate 97x48 electric combined counter top 400 V / 3N		
Model	**SAP Code**	00011361
FTHR 90 E	**A group of articles - web**	Grills and grill plates

1. **SAP Code:**
   00011361
2. **Net Width [mm]:**
   991
3. **Net Depth [mm]:**
   541
4. **Net Height [mm]:**
   288
5. **Net Weight [kg]:**
   73.00
6. **Gross Width [mm]:**
   705
7. **Gross depth [mm]:**
   1055
8. **Gross Height [mm]:**
   540
9. **Gross Weight [kg]:**
   80.00
10. **Device type:**
    Electric unit
11. **Construction type of device:**
    Table top
12. **Power electric [kW]:**
    9.000
13. **Loading:**
    400 V / 3N - 50 Hz
14. **Protection of controls:**
    IPX4
15. **Material:**
    AISI 430
16. **Indicators:**
    operation and warm-up
17. **Worktop material:**
    Sandblasted steel
18. **Surface finish:**
    sandblasted surface without coating
19. **Maximum device temperature [°C]:**
    300
20. **Minimum device temperature [°C]:**
    50
21. **Adjustable feet:**
    Yes
22. **Griddle dimensions [mm x mm]:**
    970 x 480
23. **Griddle thickness [mm]:**
    12.00
24. **Container for liquid fat:**
    Yes
25. **Independent heating zones:**
    Separate control for each heating zone
26. **Removable rim:**
    No
27. **Uniform heating:**
    Yes
28. **Top type:**
    Combinated

RM GASTRO, s.r.o.,
Třída Čs. armády 816,
391 81 Veselí nad Lužnicí 1, ID:49825062

Technical data sheet

Technical parameters

Fry-top griddle plate 97x48 electric combined counter top 400 V / 3N		
Model	**SAP Code**	00011361
FTHR 90 E	**A group of articles - web**	Grills and grill plates

29. Cross-section of conductors CU [mm²]:

2

RM GASTRO, s.r.o.,
Třída Čs. armády 816,
391 81 Veselí nad Lužnicí 1, ID:49825062